SURVEY NOTES & REFERENCES:

1). MAP ENTITLED "AS-BUILT SURVEY, FOR JACK DANIELS PORSCHE, 335 ROUTE 17 SOUTH, BLOCK 1015, LOT 7, UPPER SADDLE RIVER, BERGEN COUNTY, NEW JERSEY", AS PREPARED BY LAPATKA ASSOCIATES, INC. AND DATED 1-29-10, REVISED THRU 2-5-20.

2). ELEVATIONS SHOWN HEREON ARE IN NGVD 1929 DATUM.

3). AREA OF LOT 7, BLOCK 1015: 73,864 SQUARE FEET, (OR) 1.70 ACRES MORE OR LESS.

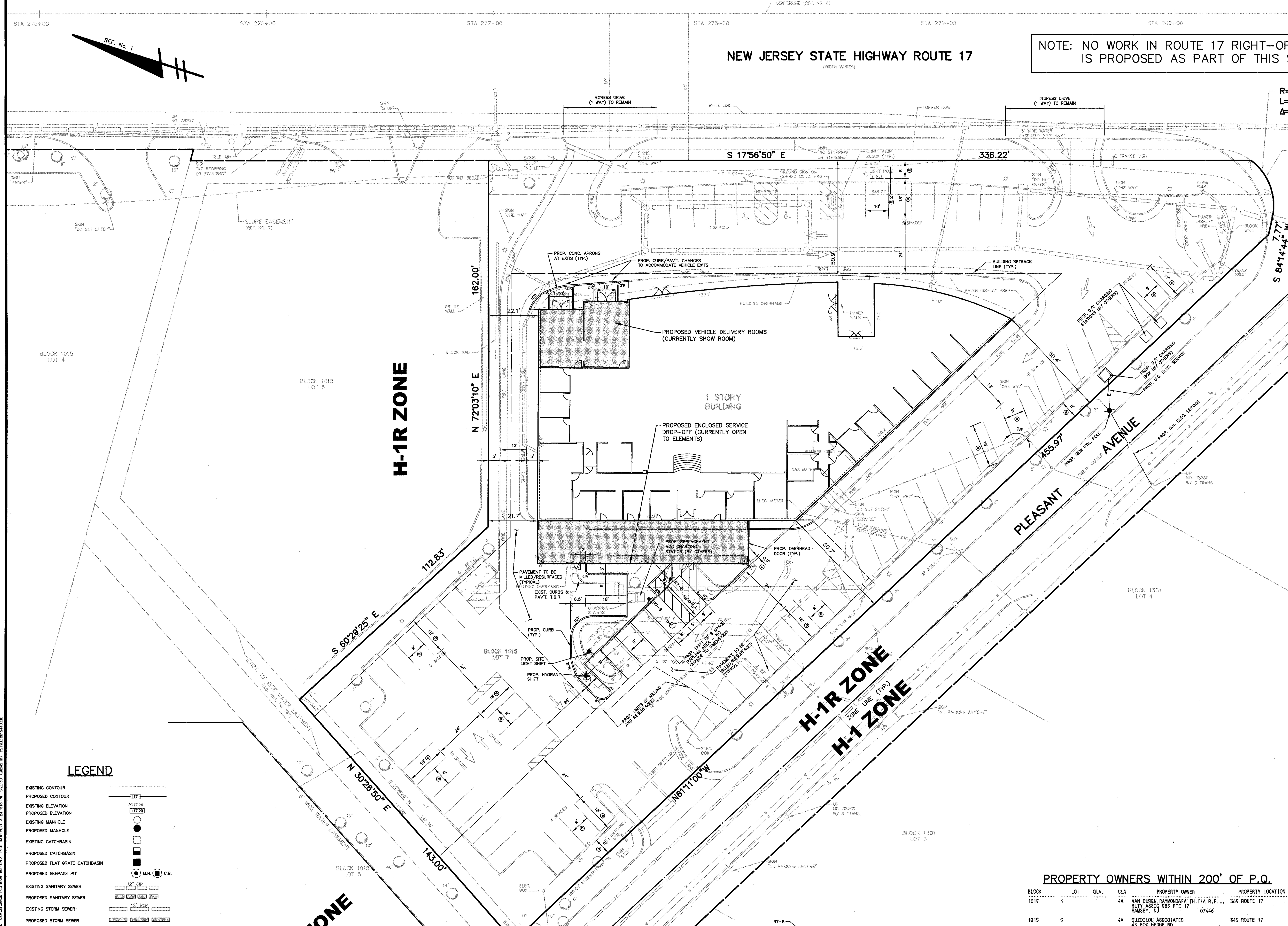

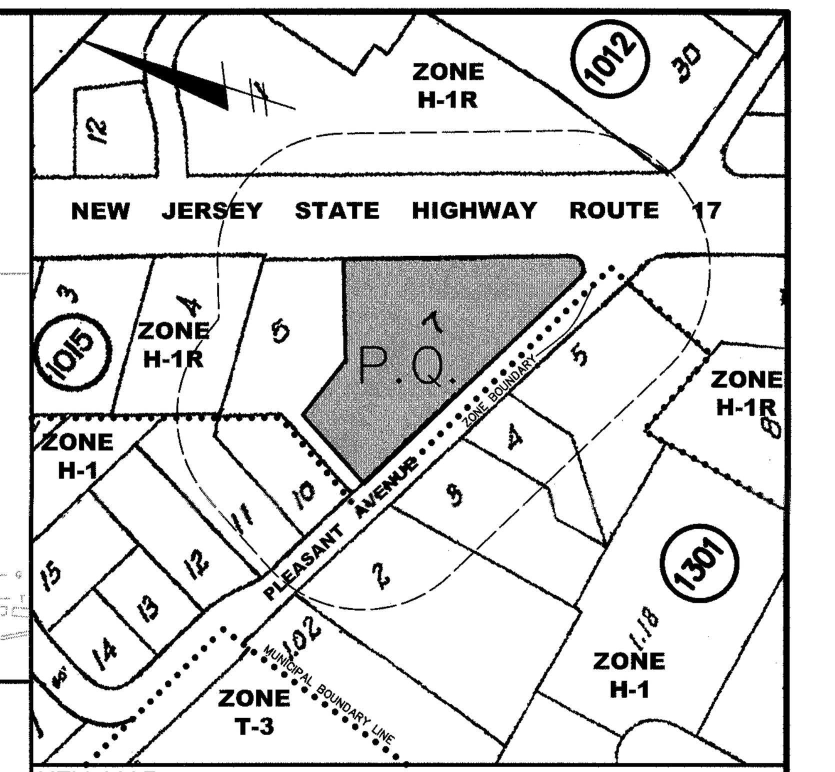

NOTES:

1. PROPERTY KNOWN AND DESIGNATED AS LOT 7 IN BLOCK 1015 AS SHOWN ON THE CURRENT TAX ASSESSMENT MAP OF THE BOROUGH OF UPPER SADDLE RIVER, SHEET No. 10.

2. OWNER: CEDAR HOLDING ASSOCIATES, 222 GRAND AVENUE, ENGLEWOOD, NJ 07631

   APPLICANT: JACK DANIELS MOTORS, INC., 120 WEST PLEASANT AVENUE, UPPER SADDLE RIVER, NJ 07458, (201) 796-8500

3. PROPERTY IS LOCATED IN THE "H-1R" ZONE. (HIGHWAY & RETAIL COMMERCIAL DISTRICT). PROPOSED USE IS FOR MOTOR VEHICLE ESTABLISHMENT (SALES OFFICES, VEHICLE SALES AND DISPLAY, SERVICE DIAGNOSIS, PICK-UP AND DELIVERY).

4. ZONING SPECIFICATIONS (H-1R ZONE)

CRITERIA	REQUIRED	EXISTING	PROPOSED
MIN. LOT AREA (S.F)	22,500	73,864	73,864
MIN. FRONT YARD (FT.)	50	50	N/C
MIN. SIDE YARD- ONE (FT.)	10	21	N/C
- TOTAL (FT.)	30	N/A	N/C
MIN. REAR YARD (FT.)	N/S	117	N/C
MIN. LOT FRONTAGE (FT.)	150	336	N/C
MIN. LOT DEPTH (FT.)	150	>400	N/C
MAX. BUILDING COVERAGE (%)	40	25.5 Ⓑ	N/C
MAX. BUILDING HEIGHT - (FT.)	36	<36	N/C
MIN. SIDE AND REAR YARD BUFFER (FT.)	5	5	N/C
MIN. FRONT BUFFER TO ROUTE 17 (FT.)	10	8 ⓔ	N/C
MIN. DISTANCE, PARKING TO R.O.W. (FT.)	10	8 ⓔ	N/C
MIN. PARKING SPACES (No.)	83 Ⓐ	78	78 ⓥ
MIN. PARKING STALL SIZE (FT.x FT.)	10 x 20	10x16 w/2'O.H.ⓔ	N/C
MIN. DISTANCE, PARKING TO BLDG. (FT.)	5	>5	5
MIN. DIST., TRAFFIC AISLE TO BLDG. (FT.)	5	5	0 ⓥ
MIN. DRIVE WIDTH, 2-WAY ACCESS (FT.)	25	36	N/C
MIN. AISLE WIDTH, 2-WAY, 90° (FT.)	24	24	N/C
1-WAY, 60° (FT.)	18	19	N/C
MIN. LOADING SPACES (No.)	0	0	N/C

N/C DENOTES NO CHANGE PROPOSED AS PART OF THIS SITE PLAN

N/A DENOTES NOT APPLICABLE TO THIS LOT CONFIGURATION

N/S DENOTES NO STANDARD FOR THIS SITE IN ZONING ORDINANCE

ⓔ DENOTES EXISTING NON-CONFORMITY

ⓥ DENOTES VARIANCE REQUIRED FOR THIS PROPOSAL

Ⓐ PARKING REQUIREMENT CALCULATIONS
USE: MOTOR VEHICLE ESTABLISHMENT
ENCLOSED BUILDING FOOTPRINT = 18,112 S.F.
SHOWROOM/CUSTOMER AREA:18,112 S.F. x 1/300 = 60 SPACES
EMPLOYEES:23 PER SHIFT x 1/EMPLOYEE = 23 SPACES
TOTAL PARKING REQUIREMENT = 83 SPACES

Ⓑ MAXIMUM BUILDING COVERAGE FIGURE SHOWN INCLUDES ALL PROPOSED STRUCTURE OVERHANGS, 18,800 SQ. FT. TOTAL. (25.45% COVERAGE) WITHOUT OVERHANGS, THE ENCLOSED BUILDING FOOTPRINT IS 18,112 SQ. FT. (24.52% COVERAGE) UNDER PROPOSED CONDITIONS. EXISTING BUILDING FOOTPRINT IS 16,308 SQ. FT.

5. EXISTING IMPERVIOUS AREA (S.F.) = 59,967
PROPOSED IMPERVIOUS AREA (S.F.) = 60,032
PROPOSED INCREASE (S.F.) = 65

6. ALL CONSTRUCTION TO CONFORM TO THE STANDARDS AND SPECIFICATIONS OF THE BOROUGH OF UPPER SADDLE RIVER.

7. LOCATION OF UNDERGROUND UTILITIES SHOWN HEREON ARE APPROXIMATE. PRIOR TO ANY CONSTRUCTION, CONTRACTOR SHALL VERIFY EXISTING SITE CONDITIONS. IF THERE ARE ANY CONFLICTS WITH THIS PLAN, THE ENGINEER / ARCHITECT SHALL BE NOTIFIED BEFORE COMMENCING CONSTRUCTION. THE CONTRACTOR'S INVESTIGATION SHALL INCLUDE, BUT NOT BE LIMITED TO, LOCATION AND ELEVATION OF ALL UNDERGROUND UTILITIES AND STRUCTURES AND CLEARANCE AT CROSSINGS. TEST HOLES MAY BE NECESSARY. COMMENCEMENT OF CONSTRUCTION SHALL CONSTITUTE ACCEPTANCE BY THE CONTRACTOR OF THIS PLAN, CONDITIONS AND CONSEQUENCES THEREOF. RESULTS OF THE TEST HOLE FINDINGS MAY NECESSITATE ADJUSTMENTS TO THIS PLAN. CONTRACTOR SHALL CALL NEW JERSEY ONE CALL AT 811 OR 1-800-272-1000 PRIOR TO THE START OF CONSTRUCTION IN ACCORDANCE WITH APPLICABLE LAWS AND REGULATIONS.

(NOTES CONTINUED TO LEFT)

NOTES: (CONTINUED)

8. BASED ON THE FINDINGS OF THIS OFFICE, THERE ARE NO EXISTING COVENANTS, EASEMENTS, EXCEPTIONS OR DEED RESTRICTIONS IMPACTING THIS PARCEL, OTHER THAN AS SHOWN HEREON.

9. "KNOX BOX" ENTRY SYSTEM INSTALLATIONS SHOWN HEREON SHALL BE FURNISHED BY THE APPLICANT TO FACILITATE EMERGENCY SERVICES RAPID ACCESS TO AND THROUGH THE PREMISES.

10. PREMISES IS CURRENTLY SERVED BY ALL PUBLIC UTILITIES FROM MAINS IN R.O.W. OF PLEASANT AVENUE. ALL EXISTING SERVICES ARE PROPOSED TO REMAIN, SUBJECT TO CONFIRMATION OF ADEQUACY BY OTHERS.

11. NO EXTERIOR WASTE OIL TANKS OR OTHER TANKS ARE PROPOSED ON THE PREMISES.

VARIANCES PREVIOUSLY GRANTED BY ZONING BOARD
(PER RESOLUTION DATED 11-10-2008)

(1) USE - SECT. 150-11 AND SECT. 150-12
AUTO DEALERSHIP USE NOT PERMITTED, SUCH USE IS PROPOSED

(2) FRONT YARD BUFFER - SECT. 150-16 AND SECT. 150-17
10 FEET REQUIRED; 8 FEET PROPOSED ALONG ROUTE 17,
8 FEET PROPOSED ALONG PLEASANT AVENUE.

(3) PARKING SPACE SIZE - SECT. 150-29.C
10 FT. x 20 FT. REQUIRED; 9 FT. x 18 FT., 10 FT. x 18 FT., AND 10 FT. x 16 FT. W/ 2' OVERHANG PROPOSED.

(4) PARKING SETBACK TO STREET LINE - SECT. 150-29.E
10 FEET REQUIRED; MINIMUM 8 FEET PROPOSED.

(5) FREESTANDING SIGN SETBACK - SECT. 150-21.B(1)
35 FEET REQUIRED; 14.5 FEET PROPOSED.

(6) FREESTANDING SIGN AREA - SECT. 150-21.B(1)
36 SQ. FT. MAXIMUM ALLOWED; 60 SQ. FT. PROPOSED.

(7) FREESTANDING SIGN HEIGHT - SECT. 150-21.B(1)
20 FEET MAXIMUM ALLOWED; 25 FEET MAXIMUM PROPOSED.

(8) FREESTANDING SIGN DEPTH - SECT. 150-21.B(1)
18 INCHES MAXIMUM ALLOWED; 18 1/2 INCHES PROPOSED.

(9) WALL SIGN AREA - SECT. 150-21.B(2)
60 SQ. FT. MAXIMUM ALLOWED; 91.5 SQ. FT. PROPOSED ("PORSCHE")

(10) AGGREGATE WALL SIGN AREA - SECT. 150-21.B(2)
90 SQ. FT. MAXIMUM ALLOWED; 129.1 SQ. FT. PROPOSED.
("JACK DANIELS" AND "PORSCHE" COMBINED)

PROPERTY OWNERS WITHIN 200' OF P.Q.

BLOCK	LOT	QUAL	CLA	PROPERTY OWNER	PROPERTY LOCATION
1015	4		4A	VAN DUREN,RAYMOND&FAITH,T/A,R,F,L, RLTY ASSOC 585 RTE 17, RAMSEY, NJ 07446	365 ROUTE 17
1015	5		4A	DUZOGLOU ASSOCIATES, 45 FOX HEDGE RD, SADDLE RIVER NJ 07458	345 ROUTE 17
1015	10		4A	121 PLEASANT AVE, LLC, P.O. BX 425, SADDLE RIVER, NJ 07458	119 PLEASANT AVE
1015	11		4A	121 PLEASANT AVE, LLC, P.O. BOX 425, SADDLE RIVER,, NJ 07458	121 PLEASANT AVE
1012	1		4A	UPPER SADDLE RIVER ASSOC LLC, 105-E PLEASANT AVENUE, UPPER SADDLE RIVER, NJ 07458	306 ROUTE 17
1012	30		4A	NORTHBOUND REAL ESTATE LLC, 40 WATCHUNG AVENUE, CHATHAM, NJ 07928	107 PLEASANT AVE
1301	2		4B	DOUBLE EAGLE REALTY INVESTMT LLC, 29-09 BROADWAY, FAIR LAWN, NJ 07410	120 PLEASANT AVE
1301	3		4B	NLD 116 PLEASANT AVE LLC, 5 N 2ND ST - D HURLEY, PARK RIDGE NJ 07656	116 PLEASANT AVE
1301	4		4A	NLD 114 PLEASANT AVE LLC, 5 N 2ND STREET - D HURLEY, PARK RIDGE NJ 07656	114 PLEASANT AVE
1301	5		4A	JANZEN LLC, 110 PLEASANT AVENUE, UPPER SADDLE RIVER, NJ 07458	110 PLEASANT AVE
1301	7		4A	2ND RAYMOND C/O KIMBER PETROLEUM, 1425 MOUNTAIN DR., NORTH BETHLEHEM, PA 18015	281 ROUTE 17

NJDOT, 1035 PARKWAY AVENUE, CN 600, TRENTON, NJ 08625

UNITED WATER CO., 200 OLD HOOK RD., HARRINGTON PK., NJ 07640

ROCKLAND ELECTRIC CO., 82 E ALLENDALE RD., SUITE #8, SADDLE RIVER, NJ 07458

PSE&G CO., MANAGER - CORPORATE PROPERTIES, 80 PARK PLAZA T6B, NEWARK, NJ 07102

TCI, PUBLIC RELATIONS DEPT., 40 POTASH RD., OAKLAND, NJ 07436

RAMSEY WATER DEPT., BOROUGH OF RAMSEY, 33 N. CENTRAL AVENUE, RAMSEY, NJ 07446

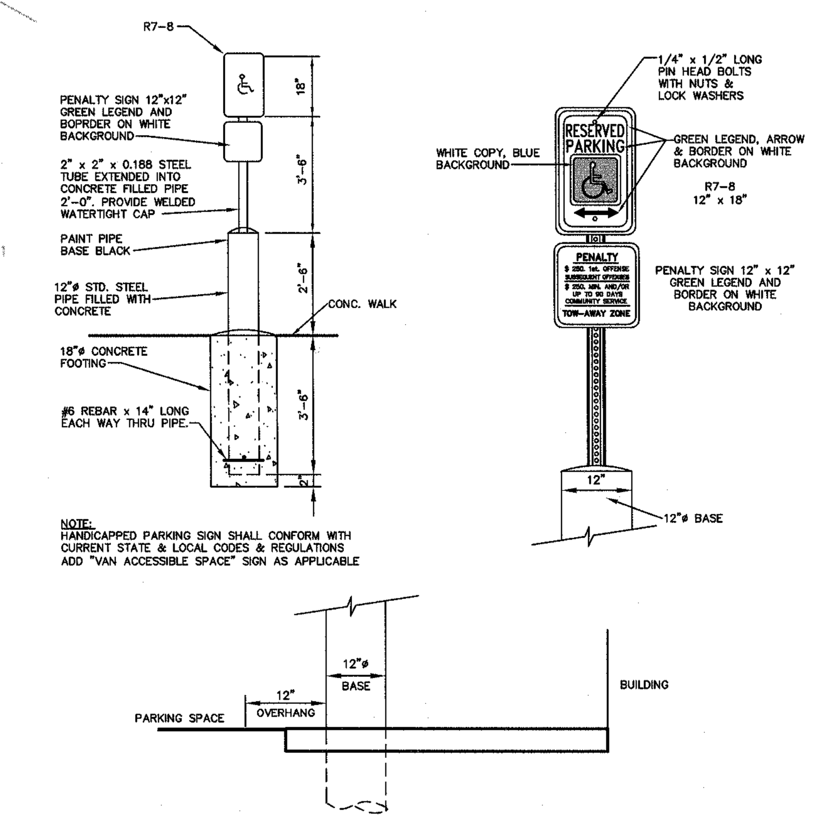

NOTE: HANDICAPPED PARKING SIGN SHALL CONFORM WITH CURRENT STATE & LOCAL CODES & REGULATIONS. ADD "VAN ACCESSIBLE SPACE" SIGN AS APPLICABLE

R7-8 SIGN/POST LOCATION DETAIL
N.T.S.

LEGEND

- EXISTING CONTOUR
- PROPOSED CONTOUR
- EXISTING ELEVATION
- PROPOSED ELEVATION
- EXISTING MANHOLE
- PROPOSED MANHOLE
- EXISTING CATCHBASIN
- PROPOSED CATCHBASIN
- PROPOSED FLAT GRATE CATCHBASIN
- PROPOSED SEEPAGE PIT (M.H. / C.B.)
- EXISTING SANITARY SEWER
- PROPOSED SANITARY SEWER
- EXISTING STORM SEWER
- PROPOSED STORM SEWER
- EXISTING UTILITIES (W=WATER, G=GAS, E=ELECTRIC, T=TELEPHONE)
- PROPOSED UTILITIES
- EXISTING GAS VALVE
- EXISTING WATER VALVE
- EXISTING HYDRANT
- PROPOSED HYDRANT
- EXISTING UTILITY POLE
- PROPOSED UTILITY POLE
- EXISTING UTILITY WITH LIGHT
- EXISTING OVERHEAD WIRES
- EXISTING GUY WIRE
- EXISTING SIGN
- PROPOSED SIGN
- EXISTING FENCE
- TO REMAIN — TR
- TO BE REMOVED — TBR

UNDER AUTHORITY OF REVISED STATE STATUTE 40:27-1, ET SEQ., THE DEPARTMENT OF PLANNING AND ECONOMIC DEVELOPMENT, DIVISION OF DEVELOPMENT REVIEW, ON BEHALF OF THE COUNTY PLANNING BOARD, COUNTY OF BERGEN, HAS REVIEWED THIS APPLICATION AND HAS DETERMINED THAT IT IS NOT SUBJECT TO COUNTY PLANNING BOARD APPROVAL.

ATTESTED TO BY: ____________________ DATE: __________

APPROVED BY THE PLANNING BOARD OF THE BOROUGH OF UPPER SADDLE RIVER.

DATE ____________________

CHAIRMAN ____________________

SECRETARY ____________________

BOROUGH ENGINEER ____________________

DATE	REVISION	BY
3-23-21	CHARGING STATIONS	LK
3-19-20	OMIT NORTH SIDE DOOR	LK

GRAPHIC SCALE: 0 10 20 40 60 80

SITE PLAN
FOR
JACK DANIELS PORSCHE
335 ROUTE 17 SOUTH
BLOCK 1015 LOT 7
UPPER SADDLE RIVER BERGEN COUNTY NEW JERSEY

LAPATKA ASSOCIATES, INC.
12 ROUTE 17 NORTH, SUITE 230
PARAMUS, N.J. 07652
(201) 587-1600
(CERT. OF AUTH. 24GA27942100)
ENGINEERS – LANDSCAPE ARCHITECTS – SURVEYORS

ALEXANDER J. LAPATKA, P.E. 28218, PROFESSIONAL ENGINEER
JEFFREY H. KLEINE, L.S. 35848, PROFESSIONAL LAND SURVEYOR

DRAWN	CHECKED	SCALE	DATE	SHEET No.	PROJECT No.
L.K.		1"=20'	2-21-20	1 OF 3	07-130

FILE:L:\2007\07-130 (JACK DANIELS, RT. 17 & PLEASANT AVE., USR)\DRAWINGS\07-130, 2020-02-10, SITE PLAN, REV 2021-03-23.DWG TAB:SITE PLAN(1) BY:CADD10 DEVICE:CANON PLOTWAVE 5000.PC3 PLOT DATE:2021-3-24 1:18 PM SIZE:30" (30x42 In) PSTYLE:2015+10.ctb